NDLED6RD-WYYHC-S-S

High-performance LED downlight module for use with RAB new construction rough-in. Microprismatic diffusion lens optimizes lumen output and delivers smooth, uniform illumination that enhances any space.

Color: Specular silver cone silver trim Weight: 2.0 lbs

Project:	Type:
Prepared By:	Date:

Driver Info		LED Info	
Type:	See Rough-in*	Watts:	20W or 26W*
120V:	See Rough-in*	Color Temp:	2700K
208V:	See Rough-in*	Color Accuracy:	90 CRI
240V:	See Rough-in*	L70 Lifespan:	100000
277V:	See Rough-in*	Lumens:	20W:1668*
Input Watts:	See Rough-in*		26W:1829*
Efficiency:	N/A	Efficacy:	N/A

Technical Specifications

Listings

UL Listed:

Suitable for wet locations covered ceiling.

ENERGY STAR:

This product is ENERGY STAR® qualified.

Optical

Photometrics:

Photometrics are based on prorated reports. Contact the RAB Lighting Design department for the most up-to-date data.

Optics:

Wall wash optics engineered for wide lateral distribution and smooth soft light from ceiling to floor.

Construction

Trim Component:

This component must be ordered with New Construction Round Rough-In in order to make a complete fixture.

Housing:

Professional-grade, die-cast aluminum construction.

Trim Ring:

Silver powder coated die cast trim ring.

Trim Cone:

Specular silver round trim cone.

Drop Ceiling Installation:

NDLED can be installed in drop ceiling tiles when using optional c-channel bars and following local construction codes.

Aperture Size:

6" Trim Module.

Easy Installation:

The EZ-Connector makes installation easy.

Junction Box:

Integral junction box with wiring capacity for
Min 90°C supply conductors
4 in 4 out

Electrical

Dimming:

Dimmable. Requires rough-in with dimming driver.

Dimming Driver:

0 - 10V (at 120-277V), TRIAC and ELV (at 120V only).

Other

Air Tight:

Housing certified Air Tight as per ASTM E283

California Title 24:

NDLED6R complies with 2013 California Title 24 building and electrical codes as a residential indoor fixture and commercial indoor fixture for general spaces.

Warranty:

RAB warrants that our LED products will be free from defects in materials and workmanship for a period of five (5) years from the date of delivery to the end user, including coverage of light output, color stability, driver performance and fixture finish.

Country of Origin:

Designed by RAB in New Jersey and assembled in the USA by RAB's IBEW Local 3 workers.

Buy American Act Compliant:

This product is a COTS item manufactured in the United States, and is compliant with the Buy American Act.

Recovery Act (ARRA) Compliant:

This product complies with the 52.225-21 "Required Use of American Iron, Steel, and Manufactured Goods-- Buy American Act-- Construction Materials (October 2010).

Trade Agreements Act Compliant:

This product is a COTS item manufactured in the United States, and is compliant with the Trade Agreements Act.

GSA Schedule:

Suitable in accordance with FAR Subpart 25.4.

LED Characteristics

Color Consistency:

3-step MacAdam Ellipse binning to achieve consistent fixture-to-fixture color.

Copyright © 2014 RAB Lighting Inc. All Rights Reserved Note: Specifications are subject to change at any time without notice

NDLED6RD-WYYHC-S-S

Dimensions

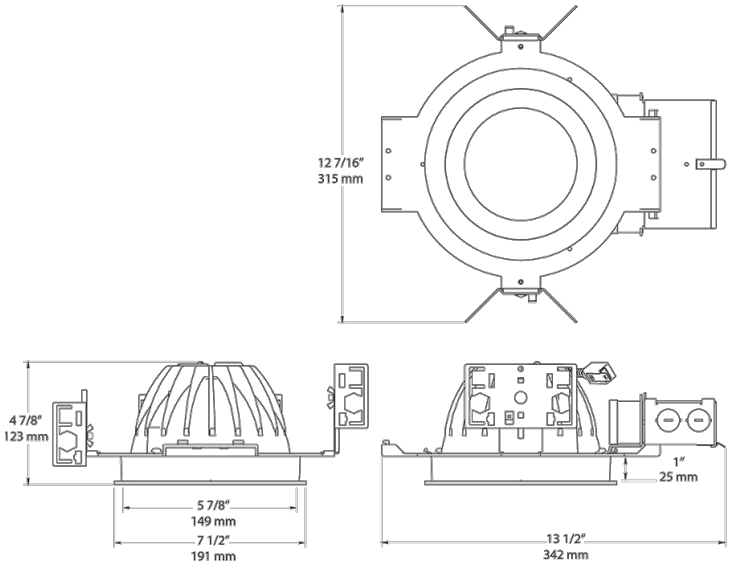

Features

Butterfly bracket allows mounting with bar stock, "C" channel, 1/2" conduit or nailer bars

Low-profile design allows for installation in ceilings with limited space

Absolute White 3-step consistency and black body accurate

Nanostructure lens eliminates "hot spots" providing smooth and efficient light

Available with 82 or 92 CRI

Ordering Matrix

Family	Size	Shape	Driver	Beam Spread	Color Temp	CRI	Cone Color	Trim Color
NDLED	6	R	D	W	YY	HC	S	S
	6 = 6"	**R** = Round	**D** = Universal Dimming	**50** = 50° **80** = 80° **W** = Wall Washer	**YY** = 2700K (Residential Warm) **Y** = 3000K (Warm) **YN** = 3500K (Warm Neutral) **N** = 4000K (Neutral)	**Blank** = 82 CRI **HC** = 92 CRI	**S** = Silver **M** = Matte Silver **W** = White **B** = Black	**S** = Silver **W** = White **B** = Black

Copyright © 2014 RAB Lighting Inc. All Rights Reserved Note: Specifications are subject to change at any time without notice