WPLED4T105FXW/480

Ultra high output, high efficiency 105 Watt LED wallpacks. Patent Pending airflow technology ensures long LED and driver lifespan. 5 Year Warranty.

Color: White

Weight: 34.8 lbs

Project:	Type:
Prepared By:	Date:

Driver Info

Type:	Constant Current
120V:	N/A
208V:	N/A
240V:	N/A
277V:	N/A
Input Watts:	109W
Efficiency:	96%

LED Info

Watts:	105W
Color Temp:	5000K
Color Accuracy:	65 CRI
L70 Lifespan:	100000
Lumens:	10,384
Efficacy:	95 LPW

Technical Specifications

Listings

UL Listing:

Suitable for wet locations.

IESNA LM-79 & LM-80 Testing:

RAB LED luminaries have been tested by an independent laboratory in accordance with IESNA LM-79 and LM-80, and have been received the Department of Energy "Lighting Facts" label.

Dark Sky Approved:

The International Dark Sky Association has approved this product as a full cutoff, fully shielded luminaire.

LED Characteristics

Lifespan:

100,000-hour LED lifespan based on IES LM-80 results and TM-21 calculations.

LEDs:

Multi-chip, high-output, long-life LEDs

Color Consistency:

7-step MacAdam Ellipse binning to achieve consistent fixture-to-fixture color.

Color Stability:

LED color temperature is warrantied to shift no more than 200K in CCT over a 5 year period.

Color Uniformity:

RAB's range of CCT (Correlated Color Temperature) follows the guidelines of the American National Standard for Specifications for the Chromaticity of Solid State Lighting (SSL) Products, ANSI C78.377-2011.

Construction

IES Classification:

The Type IV distribution (also known as a Forward Throw) is especially suited for mounting on the sides of buildings and walls, and for illuminating the perimeter of parking areas. It produces a semiCircular distribution with essentially the same candlepower at lateral angles from 90° to 270°.

IP Rating:

Ingress Protection rating of IP66 for dust and water.

Maximum Ambient Temperature:

Suitable for use in 40°C (104°F) ambient temperatures

Cold Weather Starting:

The minimum starting temperature is -40°C/-40°F

Thermal Management:

Superior thermal management with external Air-Flow fins.

Housing:

Die-cast aluminum housing, lens frame and mounting arm

Mounting:

Heavy-duty mounting arm with "O" ring seal & stainless steel screws

Reflector:

Specular vacuum-metallized polycarbonate

Gaskets:

High-temperature silicone gaskets

Finish:

Our environmentally friendly polyester powder coatings are formulated for high-durability and long-lasting color, and contains no VOC or toxic heavy metals.

Green Technology:

Mercury and UV free. RoHS compliant components. Polyester powder coat finish formulated without the use of VOC or toxic heavy metals.

For use on LEED Buildings:

IDA Dark Sky Approval means that this fixture can be used to achieve LEED Credits for Light Pollution Reduction.

Electrical

Drivers:

Two Drivers, Constant Current, Class 2, 1400mA, 347-480V, 50/60Hz, 0.25A, Power Factor 99%

Ballast Volts:

480V

Other

California Title 24:

See WPLED2T105/BL for a 2013 California Title 24 compliant product. Any additional component requirements will be listed in the Title 24 section under technical specifications on the product page.

Warranty:

RAB warrants that our LED products will be free from defects in materials and workmanship for a period of five (5) years from the date of delivery to the end user, including coverage of light output, color stability, driver performance and fixture finish.

Patents:

The design of WPLED105 is protected by patents pending in US, Canada, China, Taiwan and Mexico.

Country of Origin:

Designed by RAB in New Jersey and assembled in the USA by RAB's IBEW Local 3 workers.

Copyright © 2014 RAB Lighting Inc. All Rights Reserved Note: Specifications are subject to change at any time without notice

Technical Specifications (continued)

Other

Buy American Act Compliant:

This product is a COTS item manufactured in the United States, and is compliant with the Buy American Act.

Recovery Act (ARRA) Compliant:

This product complies with the 52.225-21 "Required Use of American Iron, Steel, and Manufactured Goods-- Buy American Act-- Construction Materials (October 2010).

Trade Agreements Act Compliant:

This product is a COTS item manufactured in the United States, and is compliant with the Trade Agreements Act.

GSA Schedule:

Suitable in accordance with FAR Subpart 25.4.

Optical

BUG Rating:

B1 U0 G2

Dimensions

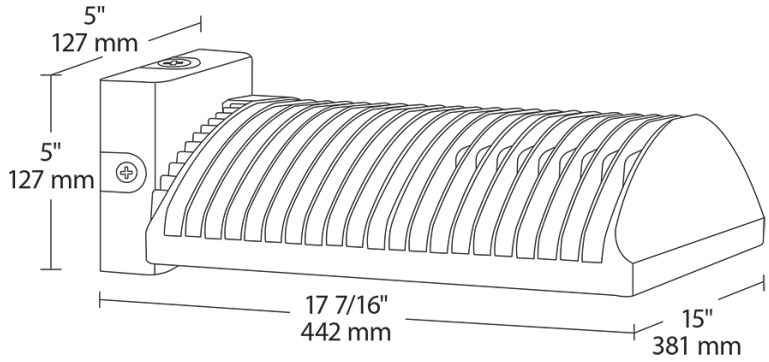

Features

- High output, high efficiency LED
- Maintains 70% of initial lumens at 100,000 hours
- Weatherproof high temperature silicone gaskets
- Superior heat sinking with die cast aluminum housing and external fins
- 100 up to 277 Volts
- 5-year warranty

Ordering Matrix

Family	Distribution	Watts	Color Temp	Mount	Finish	Voltage	Photocell	Dimming	Sensor	Bi-Level
WPLED										
	2T = Type II **3T** = Type III **4T** = Type IV	**105** = 105W	**Blank** = 5000K (Cool) **Y** = 3000K (Warm) **N** = 4000K (Neutral)	**Blank** = Standard **FX** = Flat Wall	**Blank** = Bronze **W** = White	**Blank** = 120-277V **/480** = 480V	**Blank** = No Photocell **/PC** = 120V Button **/PC2** = 277 Button **/PCS** = 120V Swivel **/PCS2** = 277V Swivel **/PCT** = 120-277V Twistlock **/PCS4** = 480V Swivel **/PCT4** = 480V Twistlock	**Blank** = No Dimming **/D10** = Dimmable	**/WS2** = Multi-Level Motion Sensor (Only available for 120-277V with /D10 for 105W)	**Blank** = No Bi-Level **/BL** = Bi-Level

Copyright © 2014 RAB Lighting Inc. All Rights Reserved Note: Specifications are subject to change at any time without notice